PMT2 Panel Mount Power Supply

PMT2 50W series / PMT-□V50W2B□□

PMT2

Highlights & Features

- Household appliance approvals for pollution degree 3 to IEC/EN 60335-1, IEC/EN 61558-1 and IEC/EN 61558-2-16
- Universal AC input voltage range
- No load power consumption <0.3W
- Low profile design : 29mm height
- Over voltage category III
- Wide operating temp -30°C ~70°C (Support -40°C cold start)
- Conforms to harmonic current IEC/EN 61000-3-2, Class A
- High MTBF > 700,000 hrs per Telcordia SR-332

Safety Standards

CB Certified for worldwide use

Model Number: PMT-□V50W2B□□
Unit Weight: 0.176 kg (0.389 lb)
Dimensions (L x W x H): 99 x 82 x 29 mm (3.9 x 3.23 x 1.14 inch)

General Description

PMT 2nd generation (PMT2) power supplies is designed with low profile, offer universal AC input with nominal output voltage. The highly efficient convection cooling construction can operate from -30°C to 70°C. The single output is specifically designed with compact and competitively priced for household electrical appliances safety approvals to pollution degree 3 as well as including IEC/EN 60335-1, IEC/EN 61558-2-16, IEC/EN 60950-1 & IEC/EN/UL 62368-1.

Model Information

PMT2 Panel Mount Power Supply

Model Number	Input Voltage Range	Rated Output Voltage	Rated Output Current
PMT-12V50W2B□□	90-264Vac	12Vdc	4.2A
PMT-15V50W2B□□		15Vdc	3.4A
PMT-24V50W2B□□		24Vdc	2.2A
PMT-30V50W2B□□		30Vdc	1.7A
PMT-36V50W2B□□		36Vdc	1.45A
PMT-48V50W2B□□		48Vdc	1.1A

Model Numbering

							CC code
PM	**T –**	**□V**	**50W**	**2**	**B**	**□**	**□**
Panel Mount	Product Type T – Enclosed	Output Voltage 12 – 12V 15 – 15V 24 – 24V 30 – 30V 36 – 36V 48 – 48V	Output Power	Single Phase with Low Profile	Family Code: B With No PFC	Connector Type A – Terminal Block	Blank – Without connector cover & coating B – With single side coating*1 C – With connector cover + single side coating*1

*1 : 12V/24V models only

All parameters are specified at 25°C ambient and nominal AC input unless otherwise indicated.

PMT2 Panel Mount Power Supply

PMT2 50W series / PMT-□V50W2B□□

Specifications

Model Number	PMT-12V50W2B □□	PMT-15V50W2B □□	PMT-24V50W2B □□	PMT-30V50W2B □□	PMT-36V50W2B □□	PMT-48V50W2B □□

Input Ratings / Characteristics

Nominal Input Voltage	100-240Vac					
Input Voltage Range	90-264Vac					
Nominal Input Frequency	50-60Hz					
Input Frequency Range	47-63Hz					
Input Current	0.95A typ. @ 115Vac, 0.6A typ. @ 230Vac					
Efficiency at 100% Load @ 230Vac	85.0% typ.	87.0% typ.	88.0% typ.	88.0% typ.	89.0% typ.	88.5% typ.
No Load Power Consumption	< 0.3W@ 230Vac					
Max Inrush Current (Cold Start)	45A typ. @ 230Vac					
Leakage Current	< 0.75mA @ 240Vac					

Output Ratings / Characteristics*2

Nominal Output Voltage	12Vdc	15Vdc	24Vdc	30Vdc	36Vdc	48Vdc
Factory Set Point Tolerance	12Vdc ± 1%	15Vdc ± 1%	24Vdc ± 1%	30Vdc ± 1%	36Vdc ± 1%	48Vdc ± 1%
Output Voltage Adjustment Range	10.8-13.2Vdc	13.5-16.5Vdc	21.6-26.4Vdc	27.0-33.0Vdc	32.4-39.6Vdc	43.2-52.8Vdc
Output Current	4.2A	3.4A	2.2A	1.7A	1.45A	1.1A
Output Power	50.4W Max.	51W Max.	52.8W Max.	51W Max.	52.2W Max.	52.8W Max.
Line Regulation	± 0.5% (@ 115Vac & 230Vac input)					
Load Regulation	± 0.5% (@ 115Vac & 230Vac input)					
PARD*3 (20MHz)	< 120mVpp @ 0°C to 70°C 360mVpp typ. @ -30°C to 0°C		< 150mVpp @ 0°C to 70°C 450mVpp typ. @ -30°C to 0°C		< 200mVpp @ 0°C to 70°C 600mVpp typ. @ -30°C to 0°C	
Rise Time	30ms typ. @ 115Vac & 230Vac					
Start-up Time	1,000ms typ. @ 115Vac 500ms typ. @ 230Vac					
Hold-up Time	12ms typ. @ 115Vac, 60ms typ. @ 230Vac					
Dynamic Response (Overshoot & Undershoot O/P Voltage)	± 10% @ 115 & 230Vac input, 10-100% load (Slew Rate: 2.5A/μS, 50% duty cycle @ 5Hz & 10KHz)					
Start-up with Capacitive Loads	8,000μF Max	8,000μF Max	8,000μF Max	470uF Max	470uF Max	470uF Max

*2 For power de-rating from > 50°C to 70°C, see power de-rating on page 3.

*3 PARD is measured with an AC coupling mode, and in parallel to end terminal with 0.1μF ceramic capacitor & 47μF electrolytic capacitor. PSU need to burn in > 5 minutes when AMB ≤ 0℃

PMT2 Panel Mount Power Supply

PMT2 50W series / PMT-□V50W2B□□

Mechanical

Case Chassis	Aluminum
Case Cover	SGCC
Dimensions (L x W x H)	99 x 82 x 29 mm (3.9 x 3.23 x 1.14 inch)
Unit Weight	0.176 kg (0.389 lb)
Indicator	Green LED (DC OK)
Cooling System	Convection
Terminal	M3.5 x 5 Pins (Rated 300V/20A)
Wire	AWG 18-12 Current rating can refer to page6 “Wire AWG Table”
Noise (1 Meter from power supply)	Sound Pressure Level (SPL) < 25dBA

Environment

Surrounding Air Temperature	Operating	-30°C to +70°C (-40°C Cold Start)
	Storage	-40°C to +85°C
Power De-rating		> 50°C de-rate power by 2% / °C < 100Vac de-rate power by 1.33% / V (86.67% load @ 90Vac)
Operating Humidity		20 to 90% RH (Non-Condensing)
Operating Altitude		0 to 5,000 Meters (0 to 16,400 ft)
Shock Test	Non-Operating	IEC 60068-2-27, Half Sine Wave: 50G for a duration of 11ms, 3 shocks for each 3 directions
	Operating	IEC 60068-2-27, Half Sine Wave: 10G for a duration of 11ms, 3 shock for each 3 directions.
Vibration	Non-Operating	IEC 60068-2-6, Random: 5Hz to 500Hz (2.09G); 20 min per axis for all X, Y, Z direction
	Operating	IEC 60068-2-6, Sine Wave: 20Hz to 500Hz (5G); 10min per cycle, 60min for each axis (X, Y,Z)
Over Voltage Category		II (Compliance to EN 62477-1 OVC III with 2000 meters altitude)
Pollution Degree		3

Protections

Overvoltage	13.2V-17.4V SELV Output, Latch Mode	16.5V-21.0V SELV Output, Latch Mode	26.4-33.6V SELV Output, Latch Mode	33.0V-40.5V SELV Output, Latch Mode	39.6V-48.6V SELV Output, Latch Mode	52.8V-64.8V SELV Output, Latch Mode
Overload / Overcurrent	110-175% of rated load current, Hiccup Mode, Non-Latching (Auto-Recovery)					
Over Temperature	Latch Mode					
Short Circuit	Hiccup Mode, Non-Latching (Auto-Recovery when the fault is removed)					
Protection Against Shock	Class I with PE*4 connection					

*4 PE: Protection Earth

Reliability Data

MTBF	> 700,000 hrs as per Telcordia SR-332 I/P: 230Vac, O/P: 100% Load, Ta: 25°C)
Expected Cap Life Time	10 years (230Vac, 50% load @ 40°C)

Safety Standards / Directives

Safety Entry Low Voltage		SELV (EN 60950-1)
Electrical Safety	TUV Bauart	EN 62368-1, EN 60950-1, EN 60335-1, EN 61558-1/-2-16
	cTUVus	UL 62368-1, and CAN/CSA C22.2 No. 62368-1
	CB scheme	IEC 62368-1, IEC 60950-1, IEC 60335-1, IEC 61558-1/-2-16
	CCC	GB4943
	KC	K 60950-1
	EAC	TP TC 004/2011
CE		In conformance with EMC Directive 2014/30/EU and Low Voltage Directive 2014/35/EU
Galvanic Isolation	Input to Output	4.0KVac
	Input to Ground	2.0KVac
	Output to Ground	1.25KVac

EMC

Emissions (CE & RE)		CISPR 32, EN 55032, , KN32, AS/NZS CISPR32 Compliance to EN55014-1, FCC Title 47, EN 61000-6-4, EN 61000-6-3 : Class B
Immunity		EN 55035, KN35 Compliance to EN55014-2, EN 61000-6-2, EN 61000-6-1
Electrostatic Discharge	IEC 61000-4-2	Level 4 Criteria A[1)] Air Discharge: 15kV Contact Discharge: 8kV
Radiated Field	IEC 61000-4-3	Level 3 Criteria A[1)] 80MHz-1GHz, 10V/M with 1kHz tone / 80% modulation
Electrical Fast Transient / Burst	IEC 61000-4-4	Level 3 Criteria A[1)] 2kV
Surge	IEC 61000-4-5	Level 4 Criteria A[1)] Common Mode[4)]: 4kV Differential Mode[5)]: 2kV
Conducted	IEC 61000-4-6	Level 3 Criteria A[1)] 150kHz-80MHz, 10Vrms
Power Frequency Magnetic Fields	IEC 61000-4-8	Level 4 Criteria A[1)] 30A/Meter
Voltage Dips and Interruptions	IEC 61000-4-11	0% residual; 1 cycle, Criteria B 40% residual; 10 cycle, Criteria C[3)] 70% residual; 25 cycle, Criteria C[3)]
Harmonic Current Emission	IEC/EN 61000-3-2	Class A

1) Criteria A: Normal performance within the specification limits
2) Criteria B: Output out of regulation, or shuts down during test. Automatically restored to normal operation after test.
3) Criteria C: Output out of regulation, shuts down during test (Need to recycle AC power cord to normal operation after test)
4) Asymmetrical: Common mode (Line to earth)
5) Symmetrical: Differential mode (Line to line)

PMT2 Panel Mount Power Supply

PMT2 50W series / PMT-□V50W2B□□

Block Diagram

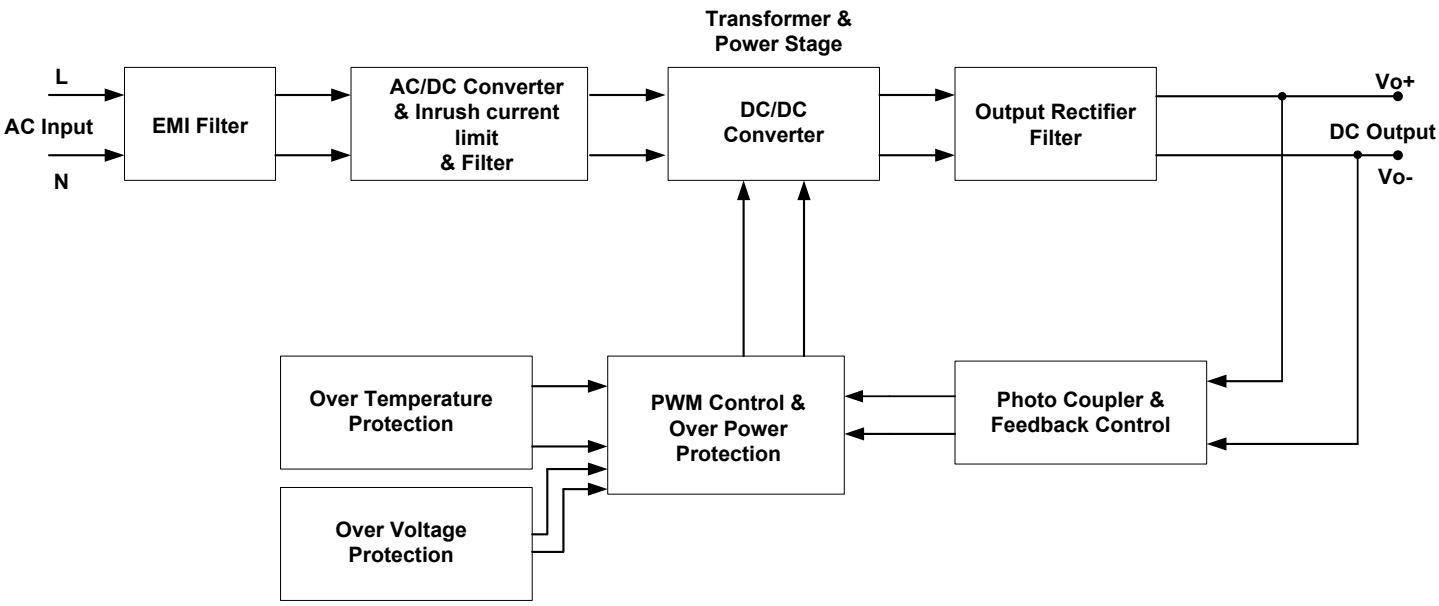

Device Descriptions

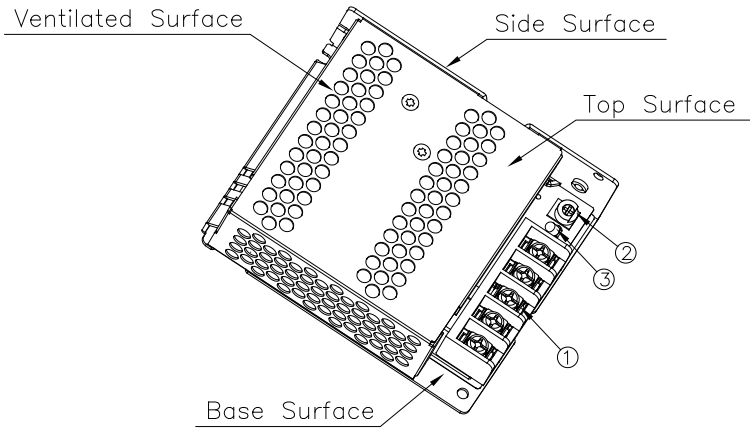

1) Input & Output terminal block connector
2) DC voltage adjustment potentiometer
3) DC OK control LED (Green)

All parameters are specified at 25°C ambient and nominal AC input unless otherwise indicated.
www.DeltaPSU.com (January 2020, Rev. 05)

PMT2 Panel Mount Power Supply

PMT2 50W series / PMT-□V50W2B□□

Dimensions

L x W x H: 99 x 82 x 29 mm (3.9 x 3.23 x 1.14 inch)

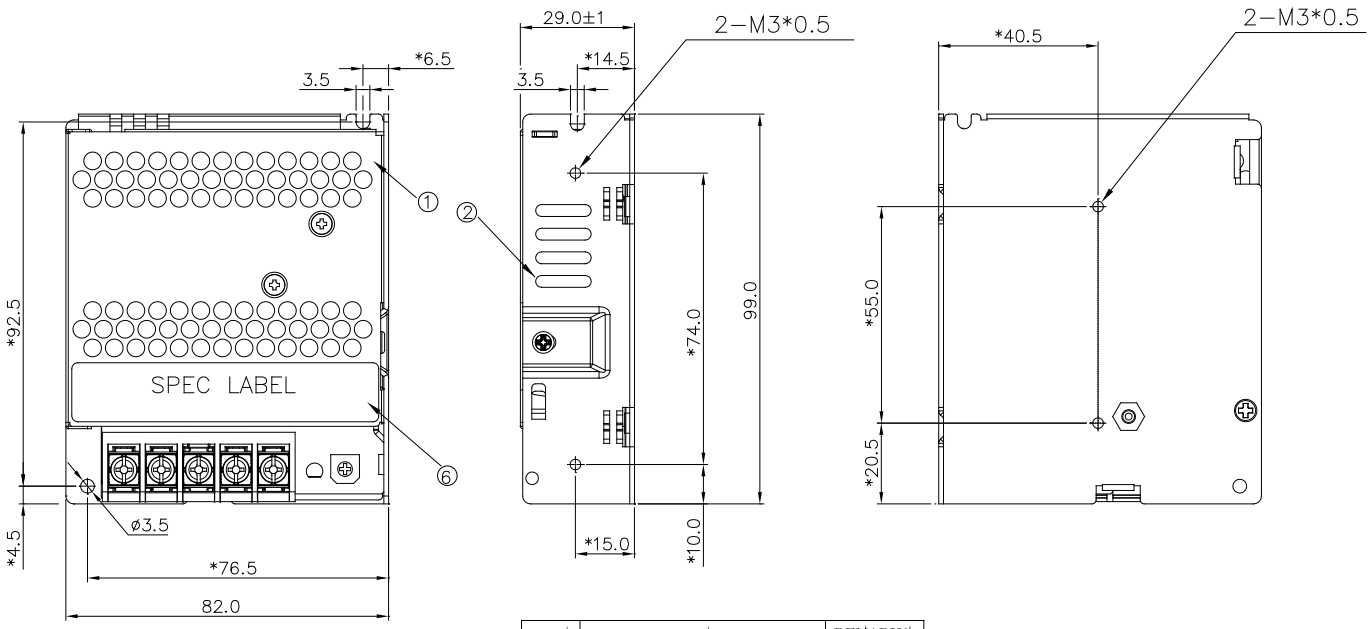

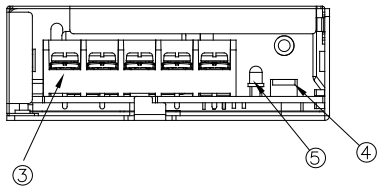

ITEM	PART NAME	REMARKS
①	COVER	NATURE
②	CHASSIS	NATURE
③	TERMINAL BLOCK 5 PIN	BLACK
④	VR	--
⑤	LED	GREEN
⑥	SPEC LABEL	WHITE

UNLESS OTHERWISE SPECIFIED
TOLERANCE OF DIMENSION ARE ±0.5.

Wire AWG Table

Current rating for PVC Wire AWG			
6AWG	52.5A	20AWG	6.5A
8AWG	37.5A	22AWG	5.0A
10AWG	29.0A	24AWG	3.5A
12AWG	22.5A	26AWG	2.5A
14AWG	16.5A	28AWG	2.0A
16AWG	12.0A	30AWG	1.5A
18AWG	9.0A		

PMT2 Panel Mount Power Supply

PMT2 50W series / PMT-□V50W2B□□

Engineering Data

Output Load De-rating VS Surrounding Air Temperature

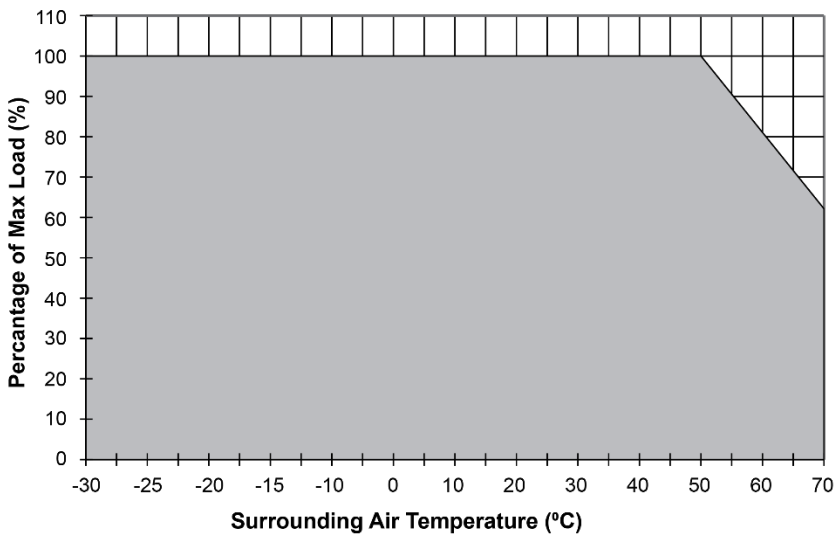

Fig. 1 De-rating for Horizontal Mounting Orientation
> 50°C de-rate power by 2% / °C

Note

1. Power supply components may degrade, or be damaged, when the power supply is continuously used outside the shaded region, refer to the graph shown in Fig. 1. & Fig. 2.
2. The PSU will be bouncing and start up time will not exceed 5s when ambient temperature at -30 °C
3. If the output capacity is not reduced when the surrounding air temperature >50°C, the device will run into Over Temperature Protection. When activated, power supply will latch off, until the surrounding air temperature is lowered or the load is reduced as far as necessary to keep the device in working condition, and require removal/re-application of input AC voltage in order to restart.
4. In order for the device to function in the manner intended, it is also necessary to keep a safety distance as recommended in the safety instructions while the device is in operation.
5. Depending on the surrounding air temperature and output load delivered by the power supply, the device can be very hot!

Output Load De-rating VS Input Voltage

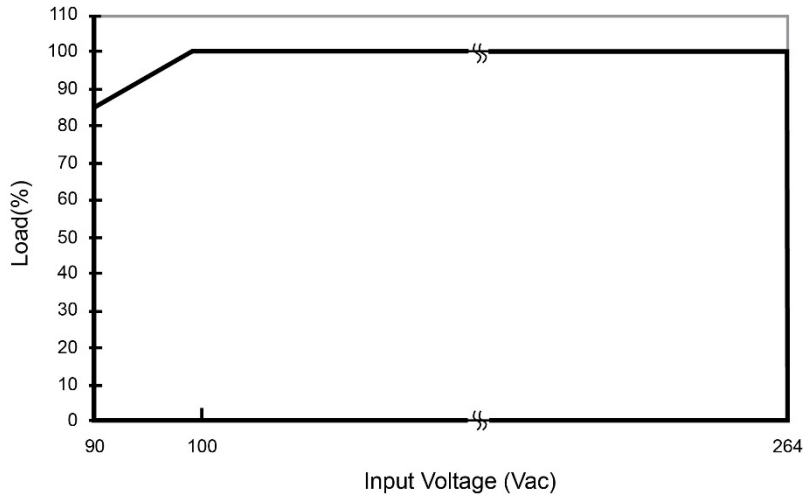

Fig. 2 De-rating for AC Input Voltage
< 100Vac de-rate power by 1.33% / V

- No output power de-rating for the input voltage from 100Vac to 264Vac

Assembly & Installation

Ⓐ Mounting holes for power supply assembly onto the mounting surface.
The power supply shall be mounted on minimum 2 mounting holes using M3 screw minimum 5mm (0.20 inch) length.
Ⓑ This surface belongs to customer's end system or panel where the power supply is mounted.
Ⓒ Connector

Base Mounting (Horizontal)

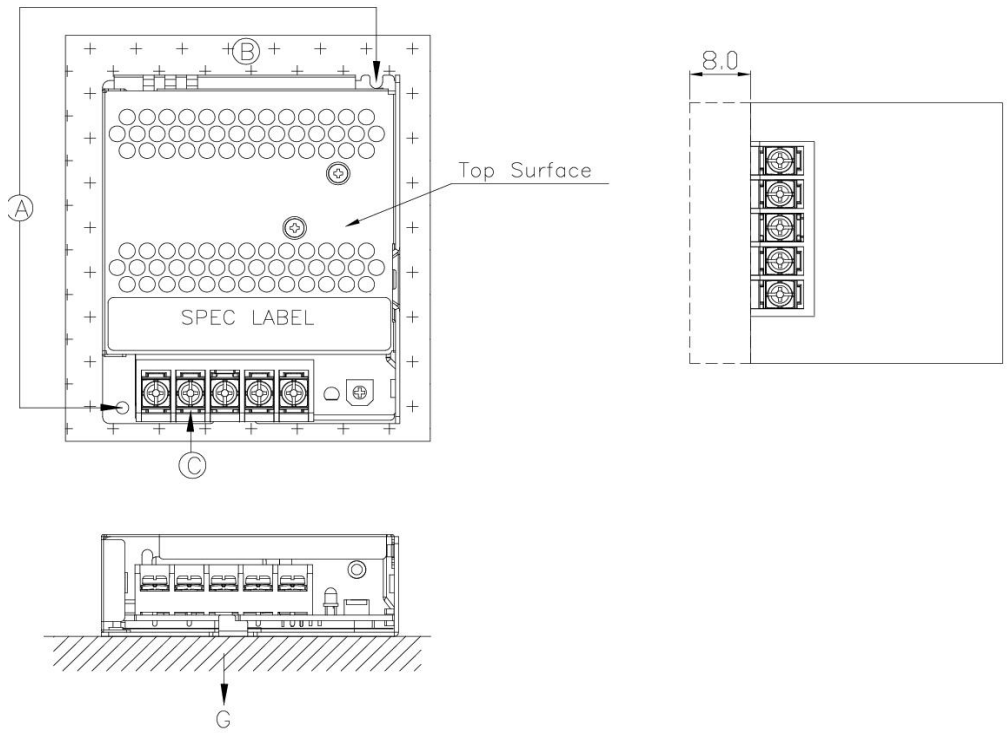

* If the device has to be mounted in any other orientation, please contact **info@deltapsu.com** for more details.

- Use flexible cable (stranded or solid) of AWG No. 18-12. User should calculate and select the suitable wire specification (type/quantity/diameter) according to actual output current. The torque at the Connector shall not exceed 8Kgf.cm. (6.94 lbf.in). The insulation stripping length should not exceed 0.275" or 7mm (Refer to Fig. 3).

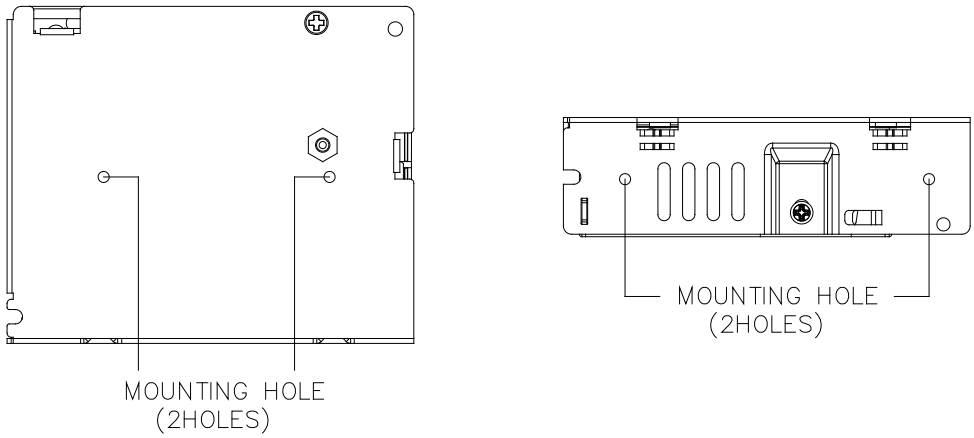

Fig. 3 Assembly Reference

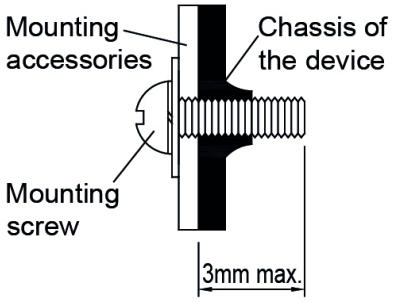

Fig. 4 Mounting Screw

- Only use M3 screw ≤ 3mm (0.20 inch) through the base mounting holes. This is to keep a safe distance between the screw and internal components.
- Recommended mounting tightening torque: 4~7Kgf.cm. (3.47~6.08 lbf.in).

Safety Instructions

- If user's mounting orientation is not according to the recommended mounting orientations, please consult Delta for further information.
- To ensure sufficient convection cooling, always maintain a safety distance of ≥ 50mm (1.97 inch) from all ventilated surfaces while the device is in operation.
- The device is not recommended to be placed on low thermal conductive surface. For example, plastics.
- The enclosure of the device can become very hot depending on the ambient temperature and load of the power supply. Do not touch the device while it is in operation or immediately after power is turned OFF. Risk of burning!
- Do not touch the terminals while power is being supplied. Risk of electric shock.
- Prevent any foreign metal, particles or conductors from entering the device through the openings during installation. It may cause: Electric shock; Safety Hazard; Fire; Product failure
- The power supply must be mounted by metal screws onto a grounded metal surface. It is highly recommended that the Earth terminal on the connector be connected to the grounded surface.

Functions

Start-up Time

The time required for the output voltage to reach 90% of its final steady state set value, after the input voltage is applied.

Rise Time

The time required for the output voltage to change from 10% to 90% of its final steady state set value.

Hold-up Time

Time between the collapse of the AC input voltage, and the output falling to 95% of its steady state set value.

■ **Graph illustrating the Start-up Time, Rise Time, and Hold-up Time**

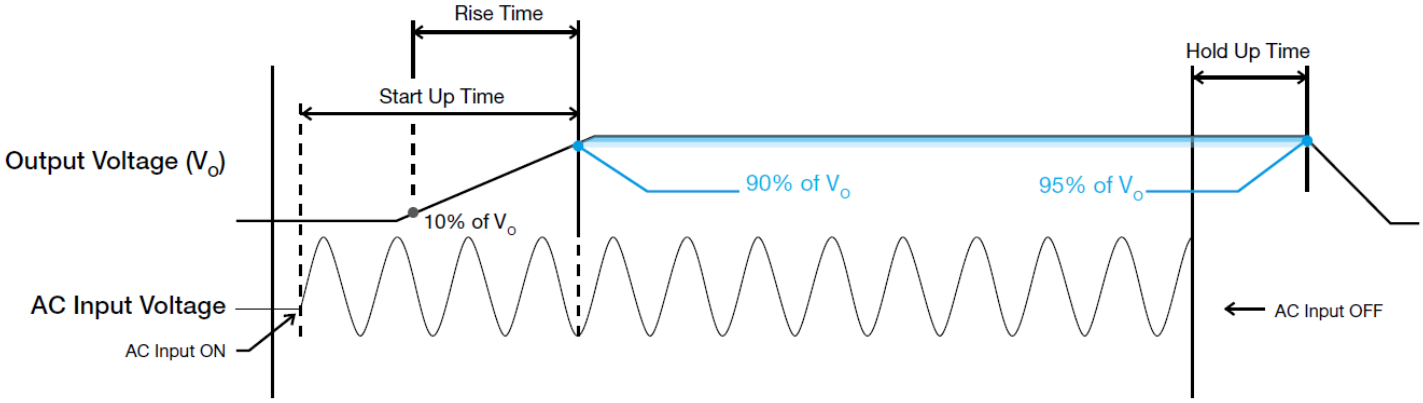

Inrush Current

Inrush current is the peak, instantaneous, input current measured and, occurs when the input voltage is first applied. For AC input voltages, the maximum peak value of inrush current will occur during the first half cycle of the applied AC voltage. This peak value decreases exponentially during subsequent cycles of AC voltage.

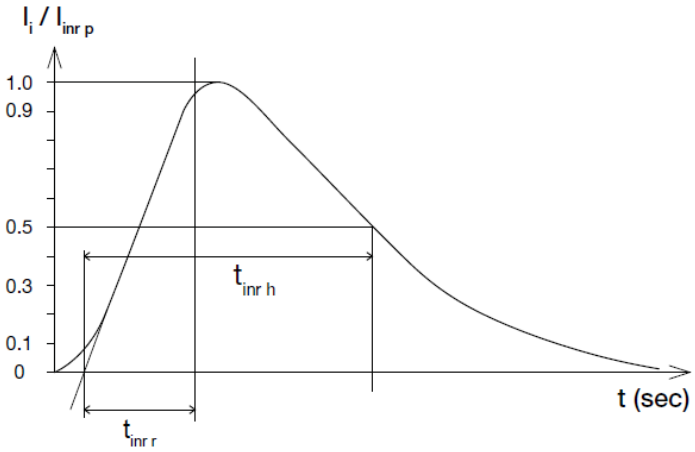

Dynamic Response

The power supply output voltage will remains within ±10% of its steady state value, when subjected to a dynamic load from 10% to 100%

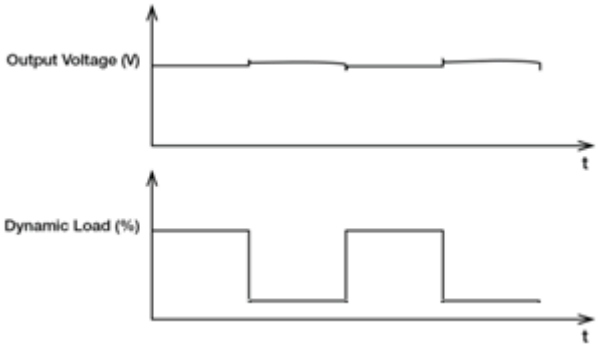

Overload & Overcurrent Protections (Auto-Recovery)

The power supply's Overload (OLP) and Overcurrent (OCP) Protections will be activated when output current exceeds 110% of I_O (Max load). In such occurrence, the V_O will start to droop and once the power supply has reached its maximum power limit, the protection is activated and the power supply will go into "Hiccup mode" (Auto-Recovery). The power supply will recover once the fault condition of the OLP and OCP is removed and I_O is back within the specifications.

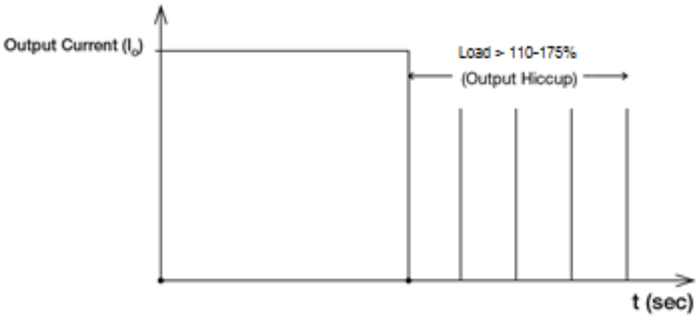

It is not recommended to prolong the duration of Io when it is <110% but >100%, since it may cause damage to the PSU.

Short Circuit Protection (Auto-Recovery)

The power supply's output OLP/OCP function also provides protection against short circuits. When a short circuit is applied, the output current will operate in "Hiccup mode", as shown in the illustration in the OLP/OCP section on this page. The power supply will return to normal operation after the short circuit is removed.

Overvoltage Protection (Latch Mode)

The power supply's overvoltage circuit will be activated when its internal feedback circuit fails. The output voltage shall not exceed its specifications defined on under "Protections". Power supply will latch, and require removal/re-application of input AC voltage in order to restart.
The power supply should be latch, and require removal /re-apply of input AC voltage in order to restart.

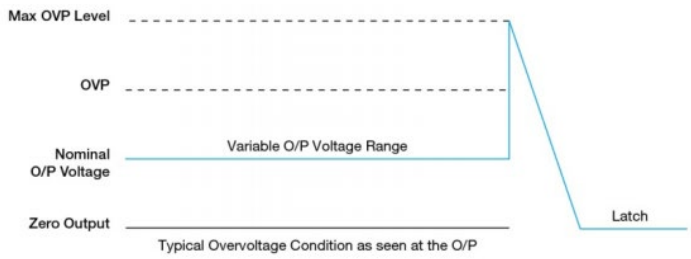

Over Temperature Protection (Latch Mode)

As described in Engineering data section, the power supply also has Over Temperature Protection (OTP). In the event of a higher operating temperature at 100% load, the power supply will run into OTP when the operating temperature is beyond what is recommended in the de-rating graph. When activated, the output voltage will go into latch mode until the temperature drops to its normal operating temperature as recommended in the de-rating graph.

Others

Attention

Delta provides all information in the datasheets on an "AS IS" basis and does not offer any kind of warranty through the information for using the product. In the event of any discrepancy between the information in the catalog and datasheets, the datasheets shall prevail (please refer to www.DeltaPSU.com for the latest datasheets information). Delta shall have no liability of indemnification for any claim or action arising from any error for the provided information in the datasheets. Customer shall take its responsibility for evaluation of using the product before placing an order with Delta.

Delta reserves the right to make changes to the information described in the datasheets without notice.

TS Connect AB / Power Outlet
Fagerstagatan 9, 163 53 Spånga, Sweden
Phone: +46 8 795 93 10 Mail: sales@power-outlet.com
Web: www.power-outlet.com